Safety instructions

Choose the location for the scooter stand also according to the following safety considerations:

The parked scooters, as well as the scooter stands themselves, must not obstruct any paths, especially escape routes, entrances and exits, roads or the like. Access and regress to and from the scooter stand must be unobstructed.

Where scooter stands are permanently mounted, the support material (wall or floor) must be suitable for mounting! Avoid consequential damage (e.g. damaged pipes or lines, broken out pieces of wall, cracked floor slabs) by proper planning! Please read the installation instructions before installation.

The scooter stands are designed for the safe parking of pedal scooters, skateboards and/or bicycles of various designs. We must expressly warn against any improper use!

Only assemble the scooter stands yourself if you have the necessary technical knowledge and have mastered the necessary skills to avoid any problems, damage and injuries resulting from assembly errors!

Observe the enclosed assembly instructions and these safety instructions! We accept no liability for damage caused by incorrect or improper assembly or use, by a tradesman or customer.

Video-tutorial for mounting

https://montage.rollerstop.com

Contact

If you have any further questions or comments, we look forward to hearing from you!

eS1xBOD60

Assembly instructions for one eS module with screw-on floor stand

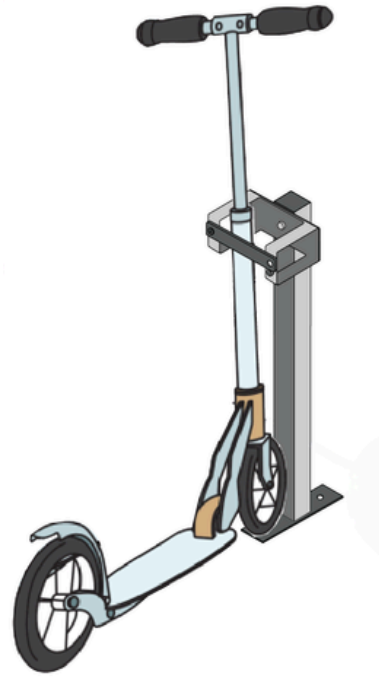

Illustration Assembly

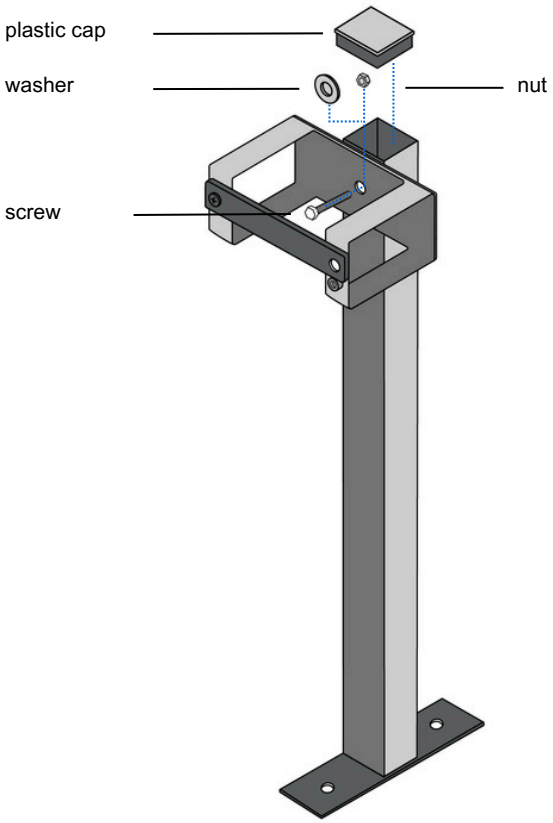

Description Assembly Pt. 1/2

Rollerstop scooter stands always consist of 2 elements: The module with the parking spaces (RS4, RS8, eS3, eS5, etc.) and the matching fastening elements (wall bracket, floor stud for screwing on or setting in concrete, bracket floor stud). **Mounting of a Rollerstop module from the eS series with a floor stand for screwing on (item number eS1xBOD60):**

When mounting the module, make sure that the lettering on the closed locking bracket can be read correctly to avoid a module being mounted upside down by mistake.

Please observe the recommendations for the respective surface:

Surface	Recommendation
Concrete	YES
Asphalt	YES*
Floor slabs in the sand bed	YES**
Floor slabs, permanently installed	YES***

* Installation on asphalt is only durable if it forms only a thin top layer (max. 3 cm) and can be screwed into an underlying, firm concrete foundation.

** Floor panels that are loosely laid in the sand bed can be levered out (vandalism). It is therefore advisable to mount only on large and heavy plates. Furthermore, always drill floor slabs with appropriate caution, as they could crack.

*** Floor slabs that are firmly laid can have the same durability as concrete. The risk of a slab cracking when drilled into is low.

Description Assembly Pt. 2/2

1. The first step is to connect the module and the fastening elements. To do this, the supplied mounting screws must be passed from the front through the hole in the module and then through a hole at the upper tube end in the floor stand.

2. Then the washer behind it is threaded onto the bolt and the nut is put on. This can now be screwed on loosely. Enough play remains that the module can be set up at right angles to the fastening elements.

3. Now the module can be brought into position and screwed to the floor (choose the appropriate dowels depending on the surface, in most cases Ø 10mm dowels are a good choice).

4. Then tighten all nuts and bolts with a spanner (size 13) until they can no longer be loosened by hand.

5. Finally, the plastic caps supplied are placed on the floor uprights and tapped in as far as they will go to seal the pipes.

Important: If two or more modules are to be mounted next to each other (in series), a minimum distance of 9 cm must be maintained between the modules.